Protocols for CRM Content in Waste Flows and Data Quality Assessment Deliverable 4.4

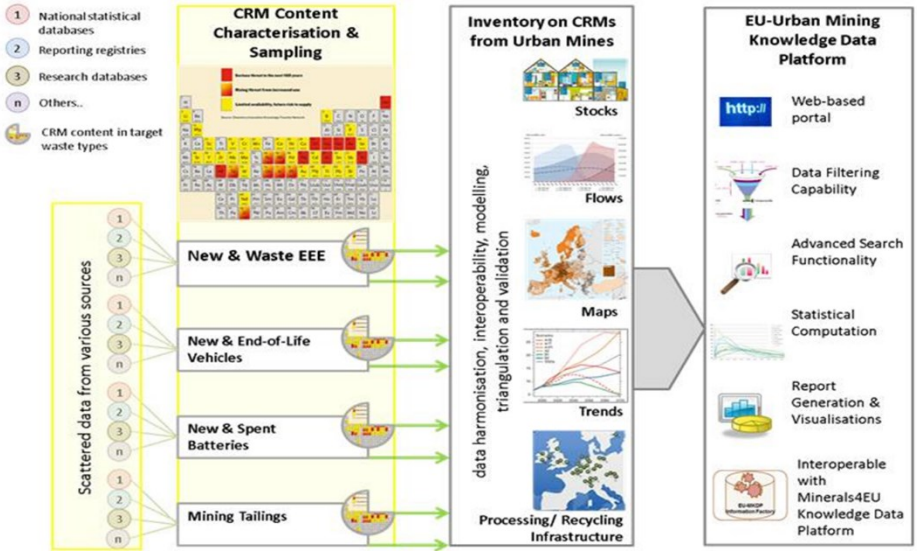

Project	Prospecting Secondary raw materials in the Urban mine and Mining waste
Acronym	ProSUM
Grant Agreement	641999
Funding Scheme	Horizon 2020
Webpage	www.prosumproject.eu
Work Package	Work Package 4
Work Package Leader	Vera Susanne Rotter, TUB
Deliverable Title	Protocols for CRM Content in Waste Flows and Data Quality Assessment
Deliverable Number	4.4
Deliverable Leader	Vera Susanne Rotter TUB, Paul Mählitz TUB
Version:	3.2
Status	Final
Authors	Vera Susanne Rotter TUB, Perrine Chancerel TUB, Johanna Emmerich TUB, Hina Habib UNU, Anders Hallberg SGU, Jaco Huisman UNU, Nathalie Korf TUB, Duncan Kushnir Chalmers, Amund N. Løvik EMPA, Paul Mählitz TUB, Maria Ljunggren Söderman Chalmers, Michelle Wagner UNU
Reviewed by	Project Management Team
E-mail	v.s.rotter@tu-berlin.de
Scientific Coordinators	Dr. Jaco Huisman, Scientific Advisor, UNU – IAS SCYCLE Dr. Nikolaos Arvanitidis
E-mail	Huisman@unu.edu Nikolaos.Arvanitidis@sgu.se

This project has received funding from the European Union's Horizon 2020 research and innovation programme under grant agreement No 641999.

Document Control

Project Coordinator:	WEEE Forum
Work Package Leader:	TUB
Deliverable leader	TUB
Due date:	M34 31 October 2017
Date of submission:	M34 23 October 2017
Dissemination level:	PUBLIC

Version history			
Ver. no.	**Date**	**Reason for release**	**Responsible**
0	27.03.17	Outline	PM, JE, PC
1	11.07.17	Input from telco D4.4, new outline	PM
1.1	19.09.17	Review	PC
1.2	25.09.17	Adaptations and alignment with D2.7	PM
1.3	09.10.17	Review and text provided	MW, PC, AH
2.0	12.10.17	Merged step 4-6 to one step 4	PM
2.0	12.10.17	Data quality assessment for p-f	MW
2.1	13.10.17	Editions and minor changes, check	PC, NK, PM
2.1	16.10.17	Review and editions of MIN recommendations	AH
2.2	16.10.17	WEEE flow information added	HH
2.3	16.10.17	ELV flow information added	MLS
3.0	17.10.17	PMT review	SD
3.1	20.10.17	Implementation of PMT review comments	HH, MW, MLS, PC, AH, PM, JH
3.2	24.10.17	Finalisation	PM

Notice

Contents

List of Figures

List of Tables

PURPOSE

This report documents the activities undertaken in Task T4.4 within the ProSUM project to produce update protocols and quality assessment procedures for waste flows and waste flow composition.

The primary purpose of the report is to document the processes, templates and, where applicable, the scripts used to work with waste flow (composition) data in ProSUM, and thereby ensure that future work adopts the same harmonised approaches and data is comparable. A secondary purpose is to provide recommendations to the scientific community and others who publish waste flow (composition) data on how to represent data in a way that facilitates sharing and inclusion in the EU Urban Mine Knowledge Data Platform (EU-UMKDP).

This report addresses exclusively waste flows and waste flow composition and complements the deliverables D2.7 on “CRM Product and Component Content and Quality Assessment” and D3.6 on “Stocks and Flows Update and Quality Assessment”.

EXECUTIVE SUMMARY

Protocols

Waste flow volumes and compositions are changing frequently, influenced by product design and lifespan, innovation cycles, collection systems, economic growth, legislation, etc. It is therefore essential for the future relevance of the EU-UMKDP that the waste flow data are updated to include the best available information. These updates consist of both quantitative data on waste flow mass (f) and composition (e/m/c/p-f) and qualitative data such as new codes for flows, material, products, etc. In alignment with D2.7, D3.6, and existing reporting rhythms of data providers, it is proposed that the data be thoroughly updated once every 1-2 years, depending on the amount and availability of new data.

Future updates to the waste flow data on waste electrical and electronic equipment **WEEE** and waste batteries **BATT** in the EU-UMKDP will need to go through the following six steps:

1. Initial control
2. Record raw data
3. Data quality (DQ) assessment of raw data
4. Inclusion of new data and updating of waste flow data sets
5. Transfer to portrayals
6. Harvest to UMKDP

In step 1, an initial quick assessment should be made to decide whether the data is to be further processed at all. Following this, in step 2, relevant data and metadata is recorded in the so-called "waste flow data templates", Excel sheets used to store raw data for each of the three waste categories, and the original source documents are stored together with their metadata in the UMKDP. In step 3, an assessment of data quality is performed based on the metadata recorded in the CRM parameter templates.

The inclusion and updating of new data with/to existing data was done differently per waste group and is described in step 4, including data quality and uncertainty assessment where applicable.
When the consolidation is completed, the new data must be transferred to portrayals (step 5) from which they can be harvested to the UMKDP (step 6). If the parameters in question had been estimated before, and the update is merely an improved estimate, the old data in the UMKDP will be overwritten.

Updates on waste flow data on end-of-life vehicles **ELV** follow similar steps, but is handled as an integral part of vehicle stock and flow calculations. Instructions on how to perform updates on waste flows are thus integrated in D3.6 on "update protocols for stock and flow modelling". The reason ELV updates differ from WEEE and BATT is a different stock and flow modelling approach in which readily available data on put on market, stock and deregistration numbers is used.

Data on **mining waste (MIN)** , gathered in the ProSUM project, will be stored in an extension of the existing Minerals4EU database for primary resources, an extension developed in the ProSUM project by work package WP5 (Heijboer et al., 2016). Future updates of mining waste information, as well as information on primary resources, will be realised through common database from which exports to the EU-UMKDP or other map servers and databases for all kind of waste can be performed.

Recommendations for improving future work

Within ProSUM, data on waste flows (f) and compositions (p-f) of WEEE, ELV, waste BATT, and MIN (only stock) have been collected, harmonised and consolidated. For all the steps required, the general approach was to first define the necessary procedures (e.g. code lists, templates for recording data), and then implement it in practice for the available data. Although the estimates for CRM content in waste flows within ProSUM achieved a reasonable validity, various limitations

influence the results. The main recommendations to overcome these limitations and improve the future work are summarised in the measures below.

1. *Harmonisation.* The lack of harmonisation was identified as a crucial issue limiting the validity of the data. To allow the recording, comparison, and consolidation of data, it is necessary to use a clear and coherent terminology and to provide meta data that describe the information. Within ProSUM, guidelines and code lists for data management were developed and used that enable the production of coherent data sets.
2. *Availability of data*. Data on product waste flows are rare and accessible from a few data sources only. Where no information is available, results from the stock & flow modelling can help to fill data gaps on f and p-f level.
3. *Cross-checks*. The data quality depends on how the source data is defined e.g. the level of aggregation or spatial coverage. Cross-checks are crucial to identify redundancies (double-counting), data gaps or simply unrealistic data.
4. *Granularity of data*. In order to assess the CRM content in waste flows a higher granularity is required. For example, data on collection categories (WEEE) or as "other batteries" (Battery Directive) do not allow direct estimations for CRM waste flows. The granularity can be improved by the extension of legal requirements (e.g. ELV Directive) or sampling campaigns.
5. *Sampling*. The sampling of waste needs common standards for execution and documentation of data. Data quality (assessment) is highly influenced by e.g. sample size, scope, methodology, spatial coverage etc. Sampling and analyses of waste flows (and stocks) is crucial to not only update the data, but also to improve data quality, reduce underestimation, and uncertainties.

1 Introduction

1.1 Aim and scope of the Deliverable

Within Task T4.2, strategies for the collection and provision of data on the content of CRM and other relevant characteristics of waste flows were established. The ProSUM project covers in specific the waste flows: waste electrical and electronic equipment (WEEE), waste batteries (BATT), and end-of-life vehicles (ELV) as well as mining waste (MIN).

The data is collected, recorded, and analysed in order to estimate consolidated data representative for country, year, key and/or subkey, etc. This resulted in two outcomes: a) quality assured data sets for waste flows as representative as possible and b) the identification of gaps and redundancies of available data.

Waste flow masses and composition are changing frequently, influenced by product design and lifespan, innovation cycles, collection systems, economic growth, legislation, etc. It is therefore essential for the future relevance of the EU-UMKDP that the waste flow data are updated to include the best available information.

In this deliverable report, we explain how to include new data in the EU-UMKDP in the future through a detailed documentation of how to i) record the data, ii) assess data quality, and iii) assure an adequate data quality.

In contrast to D2.7 (update protocols on product composition) and D3.6 (update protocols for stocks and flows), this deliverable D4.4 addresses:

1) the quantification of waste flow mass (f); and
2) analysis of the composition for (1) p-f and (2) e-f, c-f or e-p in the waste flow for WEEE, ELV, and BATT. MIN comprises element masses in stock only.

The recording templates presented provide the formats and codes that allow direct use in the consolidation procedures and consequently the future update of the EU-UMKDP.

Whilst the technical and mathematical aspects were largely covered in D4.2, the present report focuses on the practical aspects, such as how to use the ProSUM-internal Excel templates. We also provide waste flow specific recommendations for the future work with waste flow data to facilitate their inclusion in the EU-UMKDP.

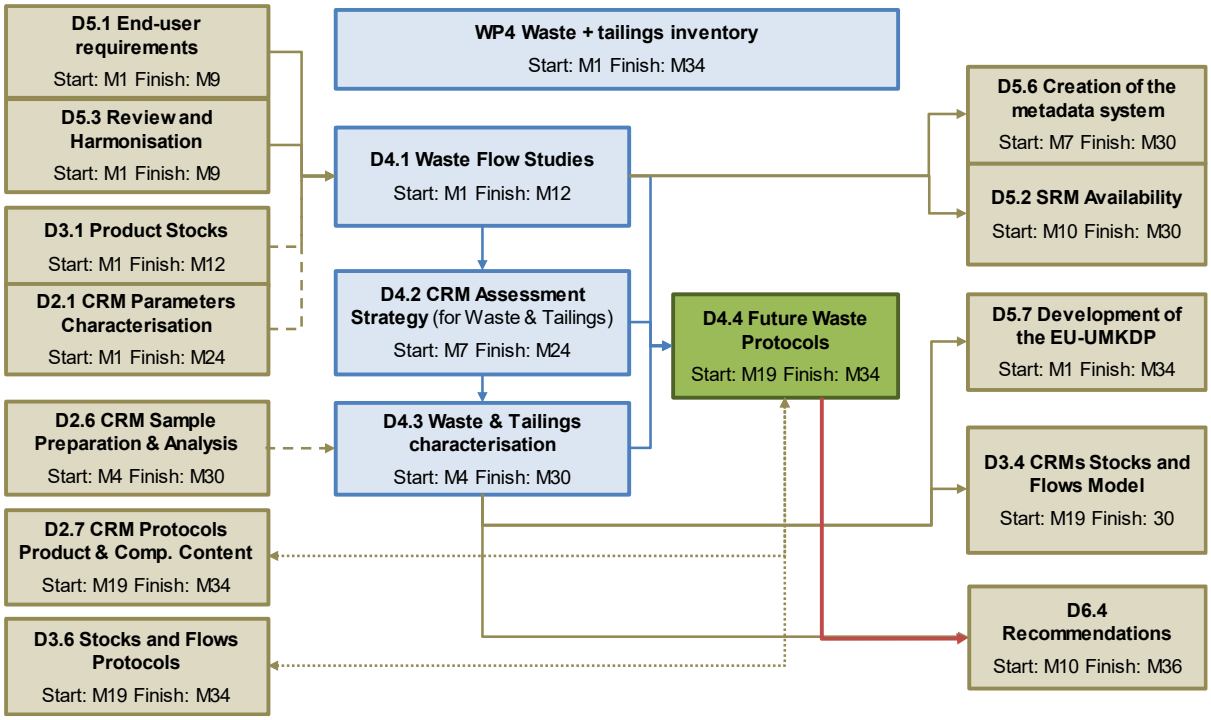

Figure 1: Pert chart positioning D4.4 in WP4 and other ProSUM deliverables.

The positioning of D4.4 in WP4 and other ProSUM deliverables is illustrated by the Pert chart shown in Figure 1.

General linkages with the other work packages arise from the necessity to apply common methods for issues that are common to all work packages. This concern, for example, the classification of products and flows and the evaluation of the data quality.

The following linkages to other work packages and deliverables are of importance:

1. Deliverable D4.1 on waste flow studies provides the basis for the data inventory done in T4.2, Deliverable D4.2.
2. Deliverable D4.2 exercised the methodologies to evaluate, filter and complement the data for the EU-UMKDP. The results and conclusion of this report build up the basis for the development of the update protocols and quality assessment procedures covered in D4.4.
3. Deliverable D2.7 and D3.6 are complementary to this deliverable D4.4 and address product composition and stocks & flows, respectively.

2 Update protocols

2.1 Update protocols: detailed process overview

A detailed overview of the procedure to include new data was developed for composition data in D2.7. An adaptation of the procedure for the waste flows is shown in Figure 2. New datasets can come in many different formats and sizes. In step 1, an initial quick assessment should be made to decide whether the data is to be further processed at all. Following this, in step 2, relevant data and metadata is recorded in the so-called “waste flow data templates” (Excel sheets used to store raw data for each of the three product categories, and detail the original source documents which are then stored together with their metadata in the UMKDP). In step 3, a data quality level is assigned to each datum based on the metadata recorded in the CRM parameter templates.

Following this, the inclusion of new data and updating of the existing waste flow data sets is realised differently in the waste groups due to the individual characteristics and data presence. Where applicable, step 4 comprises the description of how to: a) transfer new data to files for

consolidation; b) (re-)consolidate the data; and c) assess the data quality/uncertainty of the updated waste flow data sets. Where data availability does not enable the consolidation of data, these sub-steps are merged and described together.

Following this, the updated data sets must be transferred to portrayals (step 5) from which they can be harvested to the UMKDP (step 6). If the parameters in question had been estimated before, and the update is merely an improved estimate, the old data in the UMKDP will be overwritten.

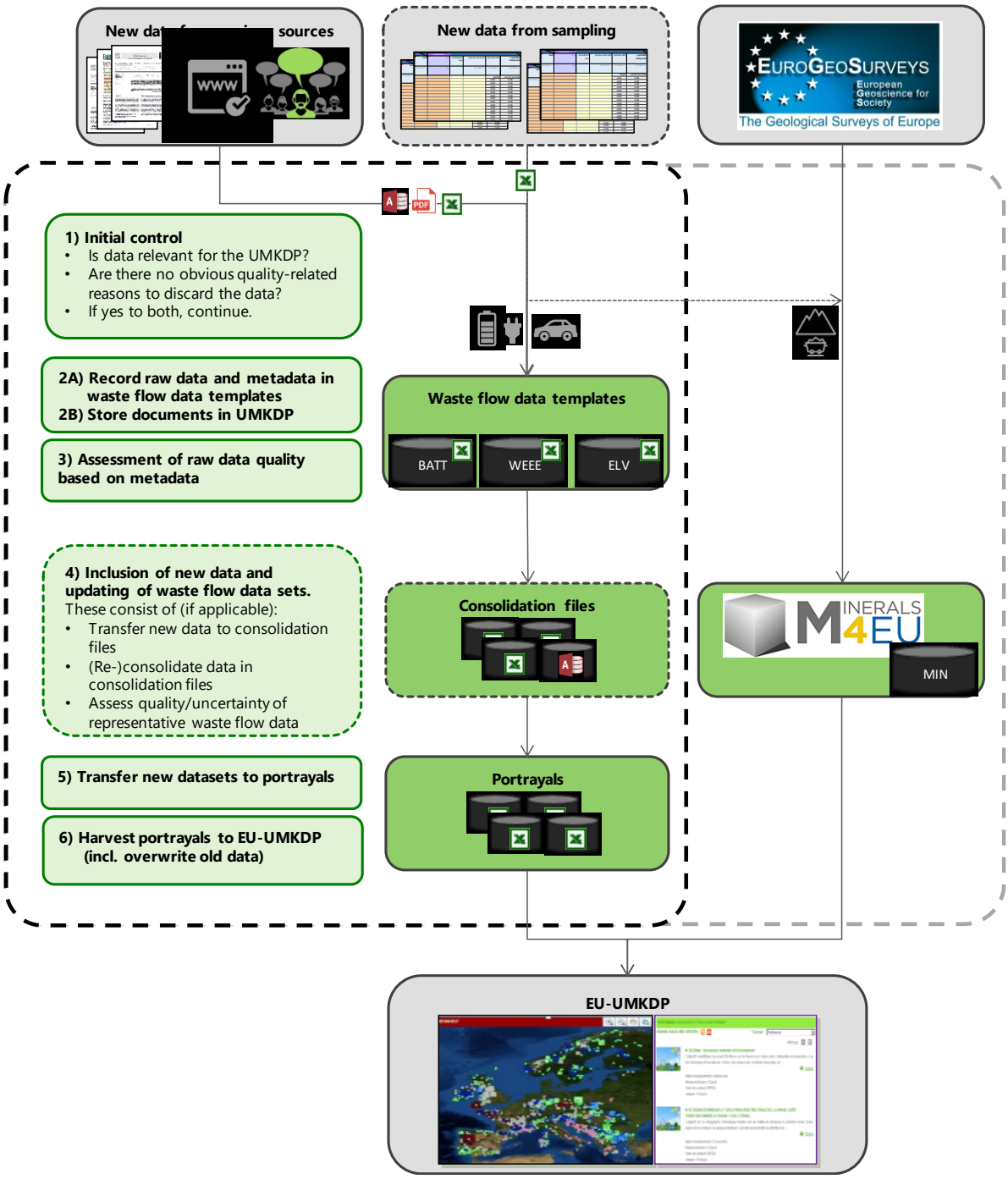

Figure 2: Detailed overview of procedures to include new data in UMKDP.

2.2 Initial control of new data *(Step 1)*

An initial control of new data should always be performed to avoid unnecessary work and cluttering of the CRM parameter template with irrelevant or dubious data. The decision will be somewhat subjective, but should be guided by the following questions:

Is the data addressing waste flows within the scope of the UMKDP?

If yes, data will be recorded as described in step 2. Where that the data is out of the current scope it should be checked whether a later extension of the UMKDP with this information may be desirable and thus a recording of those may become necessary in any case. Note: these data have to be excluded in Step 4.

Are the data useful for calculating waste flow mass and/or compositions?

Data may be in the scope of the UMKDP but have to be excluded due to a too high level of aggregation or redundant data. These redundancies may occur due to multiple publications of data along the reporting chain, e.g. the same data on battery collected are accessible from compliance schemes, EPAs, and Eurostat.

Are there obvious reasons to doubt the validity of the data?

Data that are clearly wrong should not be recorded.

2.3 Recording raw data and metadata in waste flow data templates *(Step 2)*

After the initial control of the new data to confirm its relevance, it should be recorded together with metadata in the CRM parameter template. In parallel, the document from which the data originates should be stored, along with its metadata, in the digital library of the UMKDP, from which it can be searched and accessed (unless restricted by copyright issues). The process for storing the document and its metadata is described in chapter 3.6 in the report on Task T5.3.1 in ProSUM, part of deliverable D5.7 (Cassard et al., 2016).

Data on waste flow mass (f) and composition (e/m/c/p in f) were collected, recorded, and analysed to retrieve consolidated data sets (see Deliverable D4.2 on waste flows). The information retrieved from various data sources were recorded in “waste flow data templates” in .xlsx format (BATT) and .accx format (WEEE). All information were structured in categories and translated into ProSUM codes that were developed within the respective Deliverables (e.g. Deliverable D5.5 on “Data models and code lists” (Heijboer et al., 2016)). The harmonisation of data was done according to the methodology described in Deliverable D5.3 on “Review and harmonisation of data“.

2.3.1 Recording new data on BATT waste flows

The data on BATT waste flows available so far and those that will need to be updated have the following scope:

1. f data showing the mass of the flows in tonnes per year, for collected batteries per BATT key and batteries in municipal solid waste; and
2. p-f data showing at key level the composition of the flows of collected waste batteries

These datasets require periodic updates and can be completed by other waste flows in future, e.g. data beyond collection related on sorting and recycling of waste batteries or data on flows of waste batteries in other complementary flows.

Update of the waste battery collection flow

The procedure to get data on the flows of collected batteries at key level is a complex calculation described in Deliverable 4.2, which differs, depending on data availability and country by country. The calculations are done in Excel sheets (one sheet per country).

The data used is the national data on collection of portable batteries (published by Eurostat and/or EPBA), multiplied by national or average data on the battery keys in the flows of collected waste

batteries (parameter p-f) from reports from national authorities, from compliance schemes, and from the industrial association Eucobat. For the countries for which no national data are available, European averages need to be calculated and used. In addition, the data from Eurostat on recycling of lead, nickel-cadmium and "other" batteries were used to get information including industrial and automotive batteries, and to cross-check the data.

The data compilation requires the cooperation of industrial stakeholders like the collection schemes (e.g. Bebat in Belgium, GRS in Germany) and the industrial associations Eucobat and EPBA.

Update of the waste battery recycling flow for lead and NiCd waste batteries

This update simply consists of taking the corresponding figures from Eurostat and conducting an expert assessment of the data quality.

Further data that are not part of the ProSUM portal yet

So far, no data are available on:

1. Other complementary flows other than municipal solid waste.
2. Composition data specific to waste batteries: so far, only one composition dataset for all types of batteries belonging to a BATT subkey from POM to waste flow. The data used come from producers (see Deliverable 2.5). No analysis results on waste batteries were identified as available and integrated into the data model.
3. Flows of waste batteries after collection.

In general, the systematic approach to record waste flow data (Table 1) enables recording of all types of waste flow data (f) and compositional data on product (p-f), component (c-f), material (m-f) or even element (e-f) level, also the ones that are not integrated yet. Some adaptations may be necessary. For example, if composition data specific to waste batteries were available in the future, a new linkage will be needed in the data model, because, so far, the waste flow data are linked to a single composition dataset made available by WP2 and used for all batteries flows.

2.3.2 Recording new data on WEEE flows

Data on WEEE flows (f) are reported frequently to the European Commission as obligated under the WEEE directive. Regardless of Member state (MS) specific formats of WEEE collection categories and data formats, data at Eurostat are available in 10 collection categories (6 categories from 2018). Where deviating, Member states have to re-allocate the MS specific data into an EU compliant format through e.g. sampling of WEEE flows on product level (p-f). In order to fulfil the ProSUM scope, data are crucial on at least product level, i.e. UNU key, sub-key, or sub-sub key.

2.3.3 Recording new data on ELV flows

Data on ELV flows (f) are reported frequently to the European Commission as part of the requirements in the ELV directive. The data is made available by Eurostat. No other data source of similar scope and harmonization between MS has been found. Since updates on waste flow data is handled as an integral part of vehicle stock and flow calculations, instructions on how to perform updates on waste flows are integrated in D3.6 on update protocols for stock and flow modelling.

2.3.4 Waste flow data template for recording new data of WEEE and BATT

Reported data on waste flows from national statistical institutes, industry partners, etc. come in various formats. Table 1 shows the systematic approach to record waste flow data for WEEE and BATT. The ProSUM waste flow data template to record raw data is available in Annex 1.

The template provides the option to record waste flow data (f) and compositional data on product (p-f), component (c-f), material (m-f) or even element (e-f) level.

Table 1 Waste flow data template to record waste flow composition data for WEEE, BATT, and ELV

Category	Field name	Input type	Required	Instructions
Waste flow	Product category	code	X	"WEEE" or "BATT", as applicable to the recorded data
	From process	code	X	Process from which the waste flow originates, cf. ProcessTypeCodeValue code list
	From country	code	X	Country from which the waste flows originates, cf. CountryCodeValue code list
	To process	code	X	Process to which the waste flow goes, cf. ProcessTypeCodeValue code list
	To country	code	X	Country to which the waste flows goes, cf. CountryCodeValue code list
	Downstream waste flow fraction	code	X	Specification of the waste flow, cf. DownstreamWasteFlowCodeValue code list
	Year	#	X	The year to which the waste flow relates
	Description	txt		description of waste flow as in the original data source
Product	Key	code	X	product code that closest correspond to the product in question, from one of the product key code lists. Cf. ProductKeyCodeValue code list
	Sub-key	code		product sub-key code that closest correspond to the product in question, from one of the product sub-key code lists. Only applicable for EEE and BATT sub-keys
	Sub-sub-key	code		product sub-sub-key code that closest correspond to the product in question, from one of the product sub-key code lists. Only applicable to EEE.
	Description	txt	X	Description of product as in the reference. Vehicles: Indicate class if available
	Similarity between description in reference and ProSUM code	code	X	"high", "medium" or "low". This is to account for disparities between definition of product code and object investigated in original study.
Component	Component group	code		component group describing the type of component investigated, cf. componentGroup code list
	Component	code		component code that closest correspond to the component in question, cf. component code list
	Similarity between description in reference and ProSUM code	code		"high", "medium" or "low". This is to account for disparities between definition of product code and object investigated in original study.
Material	Material type	code		material type code that closest correspond to the material in question
	Material	code		material code that closest correspond to the material in question, cf. MaterialKeyCodeValue
	Similarity between description in reference and ProSUM code	code		"high", "medium" or "low". This is to account for disparities between definition of product code and object investigated in original study.
Element	Element	code		Chemical element, cf. ElementKeyCodeValue
CRM parameter	Parameter	code	X	indicates what physical quantity was measured, e.g. mass, mass fraction, volume. Refer to the parameter code list
	Parameter subscript	code	X	indicates which entities are measured by the parameter, e.g. flow mass (**f**), products (**p-f**), components (**c-f**), materials (**m-f**) or elements (**e-f**) in flows.

Category	Field name	Input type	Required	Instructions
	Value	#	X	the observed value of the physical quantity in question
	Value type	code	X	type of statistic: “mean” or “median”, in the case of several observations aggregated
	Value lower limit	#		lower limit of confidence interval (type of interval specified later)
	Value upper limit	#		upper limit of confidence interval (type of interval specified later)
	Value units	code	X	units used for the recorded value, cf. UnitOfMeasureCodeValue
	Uncertainty	#		uncertainty
	Uncertainty units	code		units used for the recorded value, cf. UnitOfMeasureCodeValue
	Uncertainty or range type	code		type of statistic used to, cf. UncertaintyTypeCodeValue
Data quality	Data quality	code	X	Data quality assessment by expert to distinguish between data that are: “Highly confident”, “Confident”, “Less confident”, or “Dubious”
Notes and reference	Notes	txt		any other important information, esp. with respect to data quality, should be mentioned here.
	Rights	code	X	rights for the document: “Confidential”, “Copyright”, “InternalUseOnly”, “Public”
	Reference	#, txt	X	2 columns: reference number and reference name. All references are to be recorded in sheet 2. References. Add a new (and higher) number for each new reference
	Original data source ref.	#, txt		2 columns: reference number and reference name. All references are to be recorded in sheet 2. References. Add a new (and higher) number for each new reference.

2.3.5 Recording new data on MIN stock

The flow of mining waste in the form of waste rock and overburden at mine sites and tailings and sludge from concentrators is in most cases a simple, unidirectional, and short-term process where the waste produced goes directly to landfills making up a stock of mining waste. Thus, the Mining Waste part of the ProSUM project have been focused on describing the **stock of mining waste**.

The short-lived mining waste flow, although not covered by the ProSUM project, is of certain interest because it is the most advantageous site to extract metals and minerals that are commonly not recovered, such as CRM/SRM. This is because an operating mine or concentrator have the industrial infrastructure in roads, buildings, and skilled workforce in place and several of the environmental and other permits approved. However, the detailed information that an analysis of mining waste flows requires is rarely available, may be confidential, and is irrelevant for older and abandoned mines.

For mining waste, there exists no sort of template that is available for the other waste categories, it is up to each Member State (national geological survey) to arrange their data in accordance with the rules for Minerals4EU-ProSUM extension. The rules to be followed are defined by the database structure and the appropriate codes from the common code lists.

2.4 Assessment of raw data quality *(Step 3)*

Recorded data have to be compared, cross-checked, and evaluated in order to enable the assessment of raw data quality that is further used in the consolidation. The methods and principles used to e.g. allocate “highly confident”, “confident”, “less confident” or even “dubious” and exclude the data are described below.

2.4.1 BATT

For BATT, the data do not allow an automatic judgement of data quality. Expert knowledge is required to assess whether the raw data are highly confident, confident, less confident, or dubious. The assessment of the data has several dimensions that are reflected in the questions presented in section 2.2.1 of D4.2. The dimensions relate to:

1. The clear and consistent definition of the (product) scope and the temporal, geographic and demographic representativeness;
2. Sample size, description of the assumptions, and limitations to the data;
3. Data consistency between different sources, fit into the time series; and
4. Assumptions, estimates and proxies.

For more information on the quantitative approach for uncertainty analysis and error propagation, see Deliverable 3.5.

2.4.2 WEEE

For WEEE, the raw data quality assessment is split in flows f and products in flows p-f.

Collected and reported WEEE flows "f"

The assessment for collected WEEE begins with the analysis of reported data. The data on collection volumes is available from official sources, i.e. Eurostat, the Key Figures platform managed by WEEE Forum, and Member states collection schemes. Aforesaid data sources are used in order of preference. The order of preference was determined by the ability of the source to provide data that could consistently reflect the collection categories based on Directive 2002/96/EC or recast Directive (2012/19/EU) for EU28+2 and fit into the time series. Based on reliability, cross-check and comparison, sources are weighted with data quality factors, e.g. highly confident, confident, less confident, and dubious.

Products in WEEE flows "p-f"

In general, to assess the data quality for data sets from their corresponding country the following questions should be answered:

1. *Is the sample size representative for the collection category?*
   In the case that sampling campaigns provide small sample sizes they usually are not representative of the countries' collection system and therefore the data quality should be considered 'dubious' and its data points should be removed from the consolidated dataset. This applies as well for certain countries with multiple compliance schemes in place with an uneven ratio for certain categories and/or individual products. The uncertainty levels used are the same used and described in D3.2 and D3.3 and shown in Table 5. It is important to note that is not always known how representative the datasets are in respect to the differences for various countries.

2. *Is there a clear and consistent definition of the products per category in different sampling campaigns?*
   The product scope should clearly be defined and should include all types of WEEE and PV panels. Furthermore, it should specify when the sample was taken and include demographic representativeness. It is recommended that photographs are taken in order to evaluate if the product analysed corresponds to the same UNU Key which it was allocated to. The sample size used should be taken into consideration when evaluating the quality of datasets.

3. *How many assumptions and estimates were done?*
   The quality assessment done for p-f is weighted depending on the type of data source, year of the data source, and sample size it represents. Datasets that were considered uncertain or based on too few data points could hamper a proper consolidation of the flow and therefore should be done in the same way as described in D3.2: Sources are weighted with the stated factor for dubious, less confident, confident, and highly confident. Non-representative data and data points based on expert guesses should be excluded.

It is important to note that consolidation of data in p-f is country specific and unfortunately it is not always known how representative the datasets are for a specific country in respect with those from various countries. As aforementioned, we can evaluate the raw data quality and analyse whether or not to include it in our consolidation, categorise the data as dubious, less confident, confident, or highly confident.
For more information on the quantitative approach for uncertainty analysis and error propagation, see Deliverable 3.5.

2.4.3 ELV

Since updates on ELV waste flow data is handled as an integral part of vehicle stock and flow calculations, instructions on how to perform updates on waste flows are integrated in D3.6 on update protocols for stock and flow modelling. However, it can be noted that no additional quality assessment is performed within ProSUM since data has been produced and assessed by Eurostat. For more information on the quantitative approach for uncertainty analysis and error propagation, see Deliverable 3.5.

2.4.4 MIN

Not applicable. See chapter 2.5.4.

2.5 Inclusion of new data and updating of waste flow data sets (Step 4)

The waste flow data templates should contain all relevant data for estimating waste flow mass and compositions. However, since this can include different types of data for many different flows, products, components, materials and elements, it is not practical to consolidate the data directly in these files. Rather, the first step of consolidation/updating is to extract the relevant data for the waste flow in question.

In contrast to D2.7 where the following steps were addressed separately, these steps have been partly or completely merged in one step:

- Transfer new data to consolidation files;
- Re-consolidate data in consolidation files; and
- Assess data quality and uncertainty of estimated representative waste flow data

How this has been realised for each product category is explained below.

2.5.1 BATT

Most of the data on waste batteries did not need to be consolidated at all, because for most flows, there was only one source of data providing data. However, the data could be found on several platforms, e.g. one and the same data provided by a battery collector may be provided to the national authorities, to Eurostat and to the industrial associations EPBA and Eucobat, which publish them in their own statistics system.

Data consolidation activities were necessary to build average values, for instance to cover the lack of national data. This was the case regarding the p-f data. Some countries had national data (Belgium, the Netherlands, France, Germany, UK), but most countries did not. However, to enable getting data at key level, a European average was built to estimate the share of the different BATT keys in the flow of collected portable batteries. The decisions related (selection of data, weighing) were taken with the support of experts and implemented by calculations in Microsoft Excel sheets.

The data quality assessment was conducted using the same method as in step 3, i.e. the questions listed in section 2.4.

2.5.2 WEEE

For WEEE, the inclusion of new data and the updating of waste flow data sets is split in to flows - f and products in flows - p-f.

Collected and reported WEEE flows "f"

WEEE collected data is reported regularly to national registers by EPR (Extended Producer Responsibility) organizations and EEE producers. The data is later provided to Eurostat in 10 collection categories described in Directive 2002/96/EC. The available data covers all of Europe excluding Switzerland from 2005-2015. Besides Eurostat, the Key Figures platform managed by the WEEE Forum also reports the WEEE collected data in collected B2C (consumer electronics), collected B2B (business) and collected undifferentiated in the 6 collection categories of the recast Directive (2012/19/EU).

As most of collected information is reported in 10 collection categories (Directive 2002/96/EC), split factors have been applied to convert these categories into the 6 collection categories of recast Directive (2012/19/EU). A detail procedure is given in D3.2 Complementary flows section 3.1.1. In future that might not be the case, as from 2018 onwards all member states will report collection volumes in 6 collection categories.

Products in WEEE flows "p-f"

As mentioned in D3.5, in order to quantify the CRM flows in Europe an in-depth analysis of the different collection schemes from the different member states should be done. Therefore, the first step in doing so is to obtain new data from various sources like country studies, recyclers or country sampling which will allow us to do a breakdown of the number of different products within the country. Once the information is obtained, an allocation of the products to the UNU keys should be done (in the case it has not) and/or a verification of these allocations.

When all allocations of products to UNU keys are done and reviewed, they should then be multiplied by the countries populations of the corresponding year in order to have the total kg/inh per UNU key and therefore per collection category of the respective country in a percentage basis. Furthermore, a comparison of the collection flow and the waste generated from different years can be made. Not only would this provide an insight of the collection flow in that specific country per collection category but also help us make estimations of waste generated vs. collected flow.

The relative presence per UNU key in the country can be evaluated by calculating the total collection per waste generated for the respective UNU Key and year analysed in a percentage basis. To calculate the uncertainty level per UNU Key for the country being analysed an average relative presence should be done in order to calculate the first year, for the maximum uncertainty value the average relative presence should be divided by the relative presence of the first year and subtracted by minus one all in a percentage basis. For the consequent years a percentage of the relative presence with respect of the previous year should be done.

For re-consolidating information from p-f, a thorough comparison with the previous year should be made to exclude those data points which are not representative or which simply do not make sense. Once the collection flow, the waste generated on a percentage basis and its relative presence from the year in question has been calculated, a comparison per UNU key can be made. A comparison with the different data points will allow the exclusion of unrepresentative data sets.

2.5.3 ELV

There is only one data source for ELV waste flows, Eurostat, so no consolidation was needed. Updates will thus involve the inclusion of new data for additional years, and no corrections of previously included years. Instructions on how to perform updates on waste flows are integrated in D3.6 on update protocols for stock and flow modelling.

2.5.4 MIN

Data on mining waste, gathered in the ProSUM project, will be stored in an extension of the existing Minerals4EU database for primary resources, an extension developed in the ProSUM project by work package 5 (Heijboer et al., 2016). The data base extension for mining waste follows the same general structure as Minerals4EU. Future updates of mining waste information, as well as information on primary resources, will take place through a harvesting system where harmonised and standardised data in each of the contributing countries will be collected by the geological survey and put into a common database. From this common database exports to map servers and databases for all kind of waste can be performed.

2.6 Transfer new consolidated data to portrayals *(Step 5)*

2.6.1 BATT

For BATT, macros programmed in Visual Basic for Applications enabled completion of the portrayal templates. The macros automatically copy the data from the tables in which the raw data are recorded into the right column of the portrayal template (year, country, BATT key, value).

The portrayal template for BATT flows is identical to the recording template in Table 1, page 13.

2.6.2 WEEE

For WEEE, the transfer of new consolidated data is split in flows f and products in flows p-f.

Collected and reported WEEE flows "f"

After completing Step 1 and 2, collected data is linked to Excel portrayals. The data format allows for the inclusion of both 10 and 6 collection categories. For the countries where Eurostat data is missing or not reported yet, WEEE Forum data has been used for analysis. Data rights, uncertainty, data quality and Metadata-ID have been included in the portrayal and then it is linked to a master-file where other complementary flows are combined and analysed. Table 2 shows the columns which must be completed for collected WEEE.

Table 2: Portrayal template for WEEE flows f and instructions for filling them.

field name	*input type*	*Instructions*
Country	txt	Name of the country which the value corresponds to.
UNU Key	txt	Contains collection categories (Numerical 1 - 10 corresponds to Directive 2002/96/EC and Roman - VI corresponds to Directive 2012/19/EU)
Year	#	Year being analysed (data is being analysed from 2010 - 2015)
Population	#	Population of respective country. Recorded data is in tonnes which needs to be recorded as kg per inhabitant.
EEE ProSUM	#	EEE Sales data calculated in ProSUM project.
WEEE ProSUM	#	Waste generated data calculated in ProSUM project.
Collected Eurostat	#	Collected WEEE in 10 collection categories (Directive 2002/96/EC) in kg per inhabitant
Collected_country_WF	#	Collected WEEE in 6 collection categories (Directive 2012/19/EU) in kg per inhabitant
Collected B2B_WF	#	Supplementary field for WEEE Forum: collected B2B data in 6 collection categories (Directive 2012/19/EU) in kg per inhabitant
Collected B2C_WF	#	Supplementary field for WEEE Forum: collected B2C data in 6 collection categories (Directive 2012/19/EU) in kg per inhabitant
Collected undifferentiated_WF	#	Supplementary field for WEEE Forum: collected undifferentiated data in 6 collection categories (Directive 2012/19/EU) in kg per inhabitant
Rights	txt	Data rights as per source, either Public or Confidential.
ID-Metadata	#	Source reference or shorty description
UNC Min	#	minimum value of uncertainty interval (confidence interval)
UNC Max	#	maximum value of uncertainty interval (confidence interval)
Data Quality	txt	data quality, as determined by the procedure described in Step 3
Data Quality comment	txt	comments to the data quality beyond the indicated level

field name	*input type*	*Instructions*
Consolidation comment	txt	Comments to how the data consolidation was performed. It is recommended to avoid long text, as the details of the consolidation can be explained elsewhere (i.e. in the metadata catalogue).
Original or estimate	txt	Original or consolidated data
Estimation type	txt	If consolidated, a brief statement of consolidation.

An extract of collected WEEE data is shown in Figure 3.

Country	UNU_Key	Year	*population*	EEE ProSUM	WEEE_ProSUM	Collected_EUROSTAT	Collected_Country_WF	Collected B2B kg/inhab	Collected B2C kg/inhab	Collected undifferentiated kg/inhab	Rights
GBR	0	2015	*65110000*	28.99	24.62	10.18	8.14				Public
GBR	01	2015	*65110000*			5.64					Public
GBR	02	2015	*65110000*			0.87					Public
GBR	03	2015	*65110000*			2.46					Public
GBR	04	2015	*65110000*			0.65					Public
GBR	05	2015	*65110000*			0.16					Public
GBR	06	2015	*65110000*			0.33					Public
GBR	07	2015	*65110000*			0.04					Public
GBR	08	2015	*65110000*			0.01					Public
GBR	09	2015	*65110000*			0.01					Public
GBR	10	2015	*65110000*			0.01					Public
GBR	0002	2015	*65110000*	3.60	0.03						Confidential
GBR	I	2015	*65110000*	3.98	3.11	1.91	1.90	0.03	1.87		Confidential
GBR	II	2015	*65110000*	1.54	3.26	1.14	1.14	0.00	1.14		Confidential
GBR	III	2015	*65110000*	0.19	0.21	0.02	0.09	0.00	0.09		Confidential
GBR	IV	2015	*65110000*	10.88	8.10	3.88	2.75	0.01	2.74		Confidential
GBR	V	2015	*65110000*	9.97	7.44	1.77	1.50	0.04	1.45		Confidential
GBR	VI	2015	*65110000*	2.42	2.47	1.45	0.76	0.04	0.73		Confidential

Figure 3: Extract of collected WEEE portrayal f.

Products in WEEE flows "p-f"

Once the products in the flow (where data was available) have been analysed, the representation this products in the flow (relative presence of the products per sampling campaign) have been calculated and the uncertainties have been defined for the other countries, the transfer of this information to the portrayals can be made. For the countries with information at a sufficient level of detail and data quality, its original data is allocated to the respective country. For the other countries were no information was available, the average relative presence from the countries with information is allocated to them. In the case of the uncertainties, as previously described in section 2.7 for the countries were there was information the data was computed and the countries where we did not have information a qualitative assessment was done. As seen in an extract of WEEE p-f waste flow portrayal, in Figure 4, the portrayals made for p-f are simple and user-friendly and only require to fill in the information described in Table 3.

Table 3: Portrayal template for products in WEEE flows p-f and instructions for filling them.

field name	*input type*	*Instructions*
ID_Country	txt	Name of the country which the value corresponds to.
Stratum	txt	Stratum of the country
Year	#	Year being analysed
UNU Key	code	Product key for which the data applies. Taken from code lists for EEE.
UNU Key description	txt	Short description of the product key being analysed.
Collection categories	txt	Collection category being analysed.
Parameter	txt	Parameter subscript (in this case p-f).
RELP	#	The value of the relative presence of the UNU Key in the collection category of the country.
UNC Min	#	minimum value of uncertainty interval (confidence interval)
UNC Max	#	maximum value of uncertainty interval (confidence interval)
Data Quality	txt	data quality, as determined by the procedure described in D3.2
Data Quality comment	txt	comments to the data quality beyond the indicated level
Consolidation comment	txt	Comments to how the data consolidation was performed. It is recommended to avoid long text, as the details of the consolidation can be explained elsewhere (i.e. in the metadata catalogue).
Person who entered the data	txt	name of person who entered (is responsible) for the data

ID_Country	Stratum	Year	UNU_Key	UNU Key description	Collection categories	parameter	RELP	UNC MIN	UNC max	Data quality	Data quality comment	consolidation comment	who entered data
AUT	High	2013	0108	Fridges (incl. cc	I. Temperature	p-f	155%	-6%	9%	Dubious	EU average based on BEL, FRA and NLD		MW
BEL	High	2013	0108	Fridges (incl. cc	I. Temperature	p-f	155%	-6%	9%	LessConfide	UNC computed from 5 sources only		MW
BGR	Low	2013	0108	Fridges (incl. cc	I. Temperature	p-f	155%	-6%	9%	Dubious	EU average based on BEL, FRA and NLD		MW
CYP	Middle	2013	0108	Fridges (incl. cc	I. Temperature	p-f	155%	-6%	9%	Dubious	EU average based on BEL, FRA and NLD		MW
CZE	Middle	2013	0108	Fridges (incl. cc	I. Temperature	p-f	155%	-6%	9%	Dubious	EU average based on BEL, FRA and NLD		MW
DEU	High	2013	0108	Fridges (incl. cc	I. Temperature	p-f	155%	-6%	9%	Dubious	EU average based on BEL, FRA and NLD		MW
DNK	High	2013	0108	Fridges (incl. cc	I. Temperature	p-f	155%	-6%	9%	Dubious	EU average based on BEL, FRA and NLD		MW

Figure 4: Extract of the WEEE waste flow portrayal p-f.

2.6.3 ELV

Instructions on how to perform updates on waste flows are integrated in D3.6 on update protocols for stock and flow modelling.

2.6.4 MIN

Not applicable. See chapter 2.5.4.

2.7 Harvest data to the UMKDP (Step 6)

The harvesting of data to the UMKDP is covered in chapter 3.4 of deliverable report D5.7 (Cassard et al., 2016).

3 Recommendations

3.1 BATT waste flow data

Availability and type of data

Deliverable 4.2 revealed the data gaps for BATT mass flow and composition data as presented in Table 4. These data gaps have to be tackled to achieve a full picture of secondary raw materials and especially CRM flows within batteries in the EU.

Table 4: Summary of current BATT Waste flows status.

	What is present	What is missing/ Data gaps	Comments
Collection	Collected waste batteries (2008-2015) per BATT key. Data sources: EPBA, Eucobat, Eurostat, national authorities, compliance schemes	Data are not available or of low quality before 2010 in many countries. Data very limited for automotive and industrial batteries Data at subkey level for a direct link to the composition data	Lack of harmonisation of the data collection limits the data quality
Treatment	Treated waste batteries (2008-2015) for NiCd and lead-based batteries. Data sources: Eurostat, national authorities	Data for the other BATT keys are not available	Lack of harmonisation of the data collection limits the data quality and even possibly causes double counting
Complementary flows	Waste batteries in municipal solid waste for some countries	Data are not available for all countries, no differentiation of the BATT keys Data not available for most other complementary flows	Sampling has to be very large to provide reliable results. The analysis should clearly state which type of complementary waste flow was sampled

The lack of harmonisation was identified as a crucial issue limiting the validity of the data.
The data collection was supported by industrial stakeholders from compliance schemes and industrial associations, and would have been very limited without their support. Therefore, networking and follow-up is a key issue for the updatability of the data, as long as the data are not made public by legal reporting obligations or other public data collection activities.

Quality of data

The data quality very much depends on the source that defines e.g. the level of aggregation or spatial coverage. Cross-checks are crucial to identify redundancies (double-counting), data gaps or simply unrealistic data. For example, an unclear distinction between “collected” and “recycled” within the MS will result in differences of the reported masses. Table 5 sums up tentative recommendations to improve the data quality of BATT waste flows.

Table 5: Issues and tentative recommendation to improve data quality of BATT waste flows.

Issue	Research to be done	Tentative recommendation for quality improvement
National differences in reporting practices, e.g. clearer differentiation between the flows of waste BATT collected and treated	Describe, country by country, how the data reporting is done and on which primary data it is based, to summarise the differences	Harmonisation guidelines, better metadata to describe the scope of the reported data and the data collection methods that were used
Coverage (temporal, geographical and in terms of BATT keys/subkeys)	Explain where the data gaps are coming from	Recommendations: which data gaps can remain gaps, which ones should be covered (prioritisation)
Combination of several data sources to produce the datasets	Develop a method to simplify the data sourcing	Clear guidelines for data collection and processing

Issue	Research to be done	Tentative recommendation for quality improvement
Cross-checks of data	Describe how to use data redundancies: from the different data sources, and also with WEEE and ELV-related data	Guidelines on how to conduct the cross-checks

Recommendations for improving the waste BATT data

- Expand the level of detail to subkey level: conduct sampling campaigns to get more differentiated data at subkey level (electrochemical systems that can be linked with composition data) instead of key level (families of electrochemical systems, e.g. lithium-ion batteries).
- Get specific data on the chemical composition of waste batteries through sampling and chemical analysis: so far, only one composition dataset per BATT subkey is used to calculate the flows of CRM associated with the flows of batteries from put on the market (POM) to waste. The data used came from producers (see Deliverable 2.5). No results from the analysis of waste batteries were identified/available for integration into the data model. Sampling and analysis campaigns would contribute to filling the data gap and getting more specific information on the CRM content in waste batteries.
- Expand the scope to waste treatment beyond collection: in ProSUM, it was decided to stop the data collection after waste collection due to the facts that collection is the largest factor limiting the recycling of CRM and that the availability of data on battery recycling is limited. However, it would be useful to investigate the metal-specific recovery rates for specific recycling processes relative to the composition of input collected. These data would provide insights to feed the discussion on the measurement and measurability of recycling rates and the definition of legal targets regarding recycling efficiency.
- Waste BATT from WEEE treatment: sampling campaigns and focused data collection would enable the improvement of knowledge on the quantities and types of batteries separated in WEEE treatment facilities and sent to battery collectors.

Improved updating

Improving updatability depends on three main action points that are further detailed in D6.4:

- Networking and follow-up activities to maintain and expand the willingness of the industrial stakeholders to cooperate; and
- Simplifying data sourcing by having centralised data collection, providing better harmonised data.
- Improved specification of the data needs, sample sizes and costs for more efficient new data gathering campaigns.

3.2 WEEE waste flow data

Availability and type of data

To update the collected flows, the official recorded volumes are available on the Eurostat website (Eurostat, 2017). Besides Eurostat, collected data is also available at the WEEE Forum website and from individual WEEE Forum members, producer registers and their annual reports. Both previously mentioned data sources are reliable and comparable, the only problem occurred is the data gaps, e.g. data is not available for Switzerland, and for earlier years Croatian data is not reported. Nonetheless, where Eurostat data is not available for these countries or years, WEEE Forum data complemented with external sources can be used to complete the data analysis.

For p-f, WEEE data from specific country studies have been analysed by how representative they are in the collected stream. In order to make this analysis, a comparison was made between different collected stream studies in 4 countries. The WEEE waste flows were analysed according to the structure described in D4.2. Substantial data gaps remain in the analysis of products in a flow. The main reason is that most of the information acquired in these campaigns focused on small household appliances and IT. Therefore, especially for large household appliances,

professional appliances, large medical, and control appliances the data is not as representative as for the other categories and has a higher uncertainty level and a lower data quality.

Only for Netherlands, France and Belgium a relatively complete and detailed analysis has been made and in the case of the other countries they were extrapolated due to lack of data.

Data Quality

- The data quality depends on the source of data, i.e. reliability, cross-checking, data gaps, and geographical and time coverage. Both aforesaid sources for collected and reported WEEE provide highly confident data i.e. Eurostat and presumably the Key Figure Platform.
- One main issue encountered during analysis products in flows per member state was the lack of information. This affected two countries where data had to be extrapolated for these countries.
- Sample size should be clearly defined in order to analyse how confident and representative the sampling campaigns are.

Recommendations for updating and improving new WEEE data

The representativeness of datasets from flows is affected by the linkages to the stocks and composition of products. Therefore, data for products with a high confidence level and known amounts of CRM content can be calculated as shown in D2.5 (Løvik et al., 2017) and in D4.2 (Chancerel et al., 2017). However, this requires a relatively high number of products (sub-keys to UNU keys) in the collected stream for a specific country. Hence, it is recommended for collected and reported WEEE to expand the level of detail to UNU Keys and Sub-Keys/ Device Types by further sampling.

It is important to conduct more sampling and analyses of the collection waste flows in different countries in order to not only update the data but also to improve data quality, reduce underestimation, and uncertainty. If this task is undertaken, a thorough examination of the allocations of the UNU keys should be done as it was seen that there were some misallocations, which may lead to misrepresentation, underestimation, or overestimation of products in the flow.

The sampling protocol in Annex 4 provides a template to record data on WEEE flow compositions (p-f).

3.3 ELV waste flow data

Availability and type of data

In Deliverables 4.1 and 4.2 it was reported that data on ELV waste flows as reported by Member States under the ELV Directive and published by Eurostat was found to be the most comprehensive and harmonized data source. This data includes both generation and treatment of waste. Data on generation is used in stock and flow modelling, for which update protocols are reported in D3.6. Data on treatment of waste was initially retrieved by ProSUM, but is presently not used since similar data on treatment is not available for other waste flows. This data may be found relevant to include in a future expansion of the scope of flows in ProSUM.

Data on generation of ELV waste flows are reported in annual numbers of vehicles and the total mass of these vehicles. No information is provided on other characteristics forming ProSUM vehicle keys such as individual mass, drivetrain type and vintage. By using data on put on market, import of used vehicles, and fleet stock in the stock and flow model calculations, it is possible to assign vehicle keys and vintages to the generated ELVs. It is assumed that the distribution over vehicle keys and vintages are equal for all outflows from the stock (ELVs, exports of used vehicles and vehicles of unknown whereabouts). This is further explained in D3.6.

Note that only formally recorded flows and processes are included in Eurostat data. Furthermore, no data on CRM composition for end-of-life vehicles has been included since such data is scarce

and highly variable in existing data sets. This means that the CRM composition of individual vehicles is treated as unchanging from put on market to end-of-life since no information on composition has been found. For example, potential use phase changes such as addition or exchange of parts or dissipative losses of PGM elements from catalytic converters could not be considered. However, the resulting CRM content of ELV waste flows will nevertheless vary over time since some changes in CRM composition of vehicles put on the market were included.

Quality of data

Please refer to D3.6 on update protocols for vehicle stock and flow calculations.

Recommendations for improving the ELV data

Although ELV waste flows is mainly covered in D3.6, we provide some recommendations in this report too, see Table 6.

Table 6: Issues and recommendations to improve data quality of ELV flows.

Parameter(s)	Challenge	Recommendation
Registered ELV recycling	Available statistics only report number and total mass of vehicles. Other characteristics crucial for CRM content, such as individual mass and drivetrain type are not reported	Collect the same vehicle characteristics as for vehicles POM, stock and trade, e.g. mass per vehicle and drivetrain type (in ranges similar) in recycling certificates for vehicles and publish in official statistics. Requirements on expanded data recording could be made part of the ELV directive.
Lifespan distribution	Lifespan distributions were deducted from data on changes in stock. Future projections were assumed to follow a Weibull shape, all countries similar. No distinction in life span over time could be made.	Register vintage in recycling certificates for vehicles and publish in official statistics. Requirements on expanded data recording could be made part of the ELV directive.
Export of ELV for registered recycling	Destination if exported for recycling is not reported	Register destination if exported for recycling.
Vehicles of unknown whereabouts	Significant amounts of vehicles are missing from statistics. Information on intra-EU trade of used vehicles is deemed to be unreliable (Oeko-Institut, 2016).	Specific recommendations are to be expected from designated studies (Oeko-Institut, 2016). Harmonize statistics collection for treatment of 'temporarily deregistered vehicles' or publish data on passive, not yet recycled, but known to be in existence stock.
Composition data at EOL	Composition data for vehicles is very sparse, in particular at EOL.	Conduct a large number of studies on vehicle composition: 1. Presence of components in vehicles, especially CRM hotspots 2. Variations over types of vehicles 3. Variations over time in design 4. Variations in composition over the lifecycle (due to spare parts exchange, scavenging) 5. Improve and streamline measurement methodology. The auto industry may be in a good position to contribute to points 1 to 3, compiling information from IMDS. Vehicle dismantlers could contribute to point 4 and recyclers (shredder companies) could contribute to point 5. External funding from e.g. the EC may be needed for conducting such studies.

3.4 MIN waste stock data

Availability and type of data

There are several ways to get quantitative data on amounts of mining waste. Accurate ore calculation based on systematic drilling or trenching would be the most reliable sources of information, but such examples are extremely few today. Other reliable sources include

Environmental Reports, Company Reports, and Collected Production Statistics from which data on the amount of mining waste can be derived. Alternative, but less reliable sources of information are estimates made by field measurements or remote sensing. It is also possible to estimate the amount of mining waste from knowledge of mining methods and ore type and comparisons with mines and mineral processing plants where we have better information but such information becomes very uncertain.

Qualitative data on the composition of the mining waste can use similar methods as for the quantitative estimates, but this applies only to the metals and minerals that were the main product of the mine or mineral processing plant. For the large range of metals and minerals, including CRM/SRM, that are associated with the main products, the information is scarcer. Alternative sources to this kind of information are few and the only reliable method is sampling and analysis of the mining waste. As the amount of data with complete characterization of mining waste increases, it will, in the future, be possible to follow up the relationship between the main products and the associated metals and minerals for different types of ore, see, for example (Hagelüken and Mesker, 2010).

All of the above-mentioned recommendations, together with code lists to describe methods used for amount and composition estimates, are outlined in D4.2.

Data Quality

The quality of the analysis for mining waste gathered from different sources varies greatly. For the most part, the quality variations depend on the selection of sampling method and the sample digestion method used and to a lesser extent on the analytical methodology. A large part of the data coming from the mining and exploration industry is probably of good quality for the elements that are the focus for the industry but of less good quality for associated elements. Analyses in environmental reports usually use some acid leaching method as a sample digestion prior to analysis and therefore provide too low values for non-leachable minerals and elements. All these potential quality problems must be handled by the National Geological Surveys when collecting data.

Recommendations for improving with MIN data

Methods for estimates of the amount of mining waste should be further developed. A common standard for sampling, sample preparation, sample digestion and analysis of mining waste should be established. This standard may refer to the rock material analysis packages provided by several commercial laboratories today, in order to expand the data volume of complete characterization of mining waste in a rapid, standardised, and cost-effective way.
Finally, more sampling!

4 References

Cassard, D., Tertre, F., Schjøth, F., Heijboer, T., Čápová, D., Hallberg, A., Šinigoj, J., (2016) ProSUM EU-Urban Mining Knowledge Data Platform Specifications.

Chancerel, P., Huisman, J., Brechu, M.G., Habib, H., Herreras, L., Söderman, M.L., Mählitz, P., Ueberschaar, M., Hallberg, A., Løvik, A.N., Nerby, T., Rotter, V.S., (2017) CRM assessment strategy for waste flows and deposits - Deliverable 4.2 (ProSUM), EU.

Eurostat, (2005-2015) Waste statistics - electrical and electronic equipment. http://ec.europa.eu/eurostat/web/waste/key-waste-streams/weee.

Hagelüken, C., Mesker, C.E.M., (2010) Complex life cycles of precious and special metals, in: Graedel, T.E., Voet, E.v.d. (Eds.). Strüngmann Forum Report, Linkages of Sustainability, 0-262-01358-4, MIT Press.

Heijboer, T., Schjøth, F., Podboj, M., Cassard, D., Tertre, F., Hallberg, A., (2016) ProSUM Data models and code lists (D5.5).

Løvik, A.N., Wäger, P., Chanson, C., Huisman, J., Ljunggren Söderman, M., Guzman Brechu, M., Haarman, A., Habib, H., Mählitz, P., Rösslein, M., Ueberschaar, M., (2017) Report on consolidation of data into CRM database: Deliverable 2.5 (ProSUM).

Oeko-Institut, (2016) Assessment of the implementation of Directive 2000/53/EC on end-of life vehicles (the ELV Directive) with emphasis on the end-of life vehicles of unknown whereabouts, in: GmbH, A.S.u.I.i.U.u.G., Durable, I.I.d.C.e.d.E.e.D., (RWA), R.a.W.A.G. (Eds.).

Annex 1 – Waste flow data template

The waste flow data template used for recording composition data from primary sources is supplied as Annex 1 in XLS format to this deliverable report.

Annex 2 – Waste flow specific code lists

The recording of available data on BATT and ELV included processes and downstream waste flows behind the collection. These data are not (yet) included for ELV in the EU-UMKDP. Nevertheless, in order to allow the recording of data that are currently available, the codes in Table 7 should be used.

Table 7: Code list for processes in ELV and BATT waste flows as used in ProSUM

Code for Process	Description	ELV	BATT
disposal	Disposal; e.g. landfilling	X	
burning	Burning	X	
dismantling	Dismantling	X	
evaporation	Evaporation	X	
gravitySeparationTable	Gravity separation table	X	
incineration	Incineration	X	
magneticSeparation	Magnetic separation	X	
materialRecycling	Material recycling	X	
recycling	Recycling	X	X
reuse	Reuse	X	
shredding	Shredding	X	
wasteCollected	Waste, collected (Collection in the meaning of Directive 75/442/EEC)		X
recovery	Recovery (excluding energy recovery) R2 to R11 of Directive 75/442/EEC		X
energyRecovery	Energy recovery: R1 of Directive 75/442/EEC		X
incineration	Incineration: D10 of Directive 75/442/EEC		X
disposalOnLand	Disposal on land: D1, D5, D12 of Directive 75/442/EEC		X
landTreatmentReleaseIntoWater	Land treatment/release into water: D2, D3, D4, D6, D7 of Directive 75/442/EEC		X
recyclingInput	Recycling, input in recycling process		X
recyclingOutput	Recycling, output from recycling process		X

Annex 4 – Sampling protocol for WEEE and batteries

In case sampling campaign are carried out, a coherent approach should be used to record the data to allow comparability, the further processing of data and the inclusion in the EU-UMKDP. Within ProSUM, a sampling protocol (see Table 8) was developed using the syntax and codes of the project. This allowed direct use of the data in the consolidation and closing of data gaps identified. The protocol differentiates between:

1. the sampling of WEEE (product count) to identify p-f
2. idem with focus on scavenging of (valuable) components,
3. identification of batteries embedded in WEEE (complementary flows)

The evaluation of sampling data is further addressed D3.6 and D4.3.

Table 8: Sampling protocol for WEEE and Batteries.

Category	Field name	Input type	Required	Instructions
Product	Prod. ID #	#	X	In case multiple components or batteries are added as additional rows to the same product, repeat the same Prod ID#

Category	Field name	Input type	Required	Instructions
	PictureID#	#		In case a picture is taken otherwise hide column.
	Product category	code	X	“WEEE” or “BATT” as applicable to the recorded data
	CRM parameter subscript	code	X	indicates which entities are measured by the parameter, e.g. flow mass (f), products (p-f), components (c-f), materials (m-f) or elements (e-f) in flows. For entire products: use "p". For components weighted (and dismantled) use "c-p". For detached components like adapters and cable, select "c" and fill in column N, O
	Product description ENGLISH	txt	X	Description of product, if possible use product names as stated in the sheet "Product name to UNU Key" to allow automatic allocation of UNU (sub-/sub) Key. Please add new Product names in this sheet.
	UNU Key	autofill		Product code that closest correspond to the product in question. Will be automatically filled if product description in English is available. Data are taken from sheet "Product name to UNU Key".
	UNU Key + description	autofill		Automatically filled when UNU Key is given
	UNU Sub-key	autofill		Automatically filled when products description is entered and respective description is available in sheet "Product name to UNU Key".
	UNU Sub-sub-key	autofill		product sub-sub-key code that closest correspond to the product in question, from one of the product sub-key code lists. Only applicable to EEE.
	Production year	#		year of production. This is helpful to identify product life span.
Scavenging	Missing cable/ mains cord?	y/n		Indicate with yes or no whether components were removed (scavenged) before arriving at the sorting location.
	Missing motors/ coils/ transformers?	y/n		
	Missing outer casing/ steel parts?	y/n		
	Missing other relevant parts?	y/n		
Component	Comp. Id #	#		In case multiple materials or batteries are added as additional rows to the same component, repeat the same Comp. ID#
	Component description	txt		Description of component is required if no adequate component code can be identified.
	Component group	code		component group describing the type of component investigated, cf. componentGroup code list
	Component	code		component code that closest correspond to the component in question, cf. component code list
Material	Material Id #	code		In case the same material is added as additional rows (e.g. fractions of broken part), repeat the same Material ID#
	Material type	code		material type code that closest correspond to the material in question
	Material	code		material type code that closest correspond to the material in question
Data	Mass of device, component, material	#	X	the observed value of the physical quantity in question
	Unit	code	X	units used for the recorded value, cf. UnitOfMeasureCodeValue
Battery information				Preferably the Batteries removed are specified belonging to a specific product/ UNU key. If not due to time constraints, do not fill in the BATT data here but in the next sheets BATT Sampling
	Battery ID #	#		In case multiple batteries are added as additional rows to the same product, repeat the same Battery ID#
	BATT description	txt		Use description (designation) as given in sheet "BATT Key" to allow automatic allocation of BATT Key in next column. Please add new descriptions with respective BATT Key and Sub-Key to the table in sheet "BATT Key"
	BATT key	autofill		Automatically filled when BATT description is given and available in allocation table "BATT Key"
	BATT sub key	autofill		Automatically filled when BATT description is given and available in allocation table "BATT Key"
	Number of batteries "n"	#		number of batteries found in one product. In case that different batteries are found in the same product, repeat Product ID in the very first column.
	Mass of all batteries	#		Mass of all batteries found in the individual product.
	Mass of one battery (cell)	#		"Mass of all batteries" divided by "number of batteries" in case that all batteries are of the same type.

Category	Field name	Input type	Required	Instructions
	Unit	code		units used for the recorded value, cf. UnitOfMeasureCodeValue
	Voltage	#		Voltage as indicated on battery. This is recommended if no BATT (Sub) Key could be identified
	Shape	txt		choose between: button, cylindrical, prismatic. This is recommended if no BATT (Sub) Key could be identified
Comments		txt		Comments